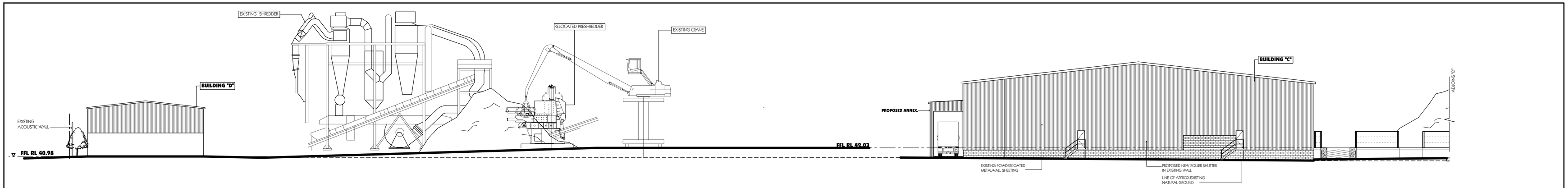

SOUTH ELEVATION 2

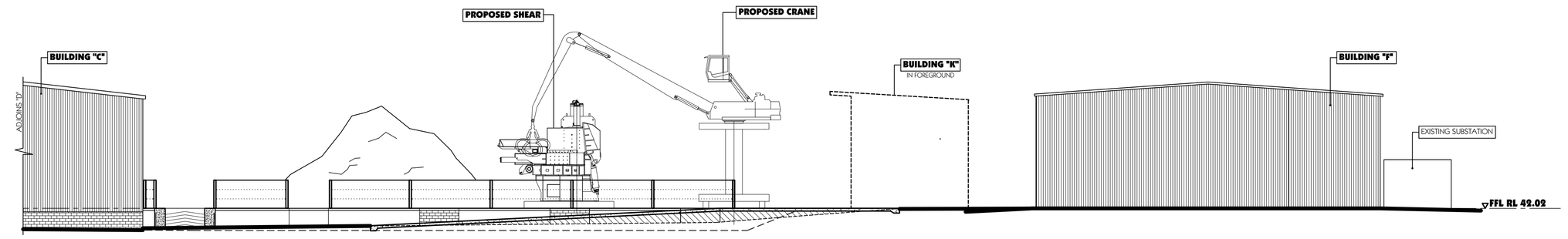

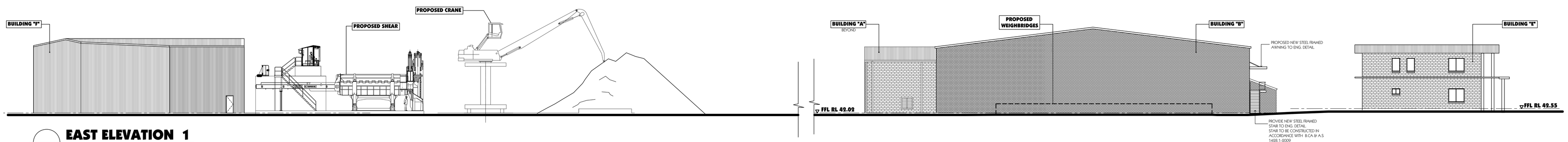

EAST ELEVATION 1

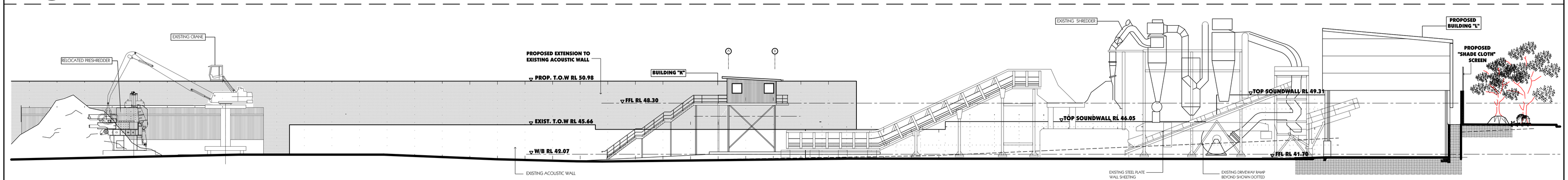

EAST ELEVATION 2

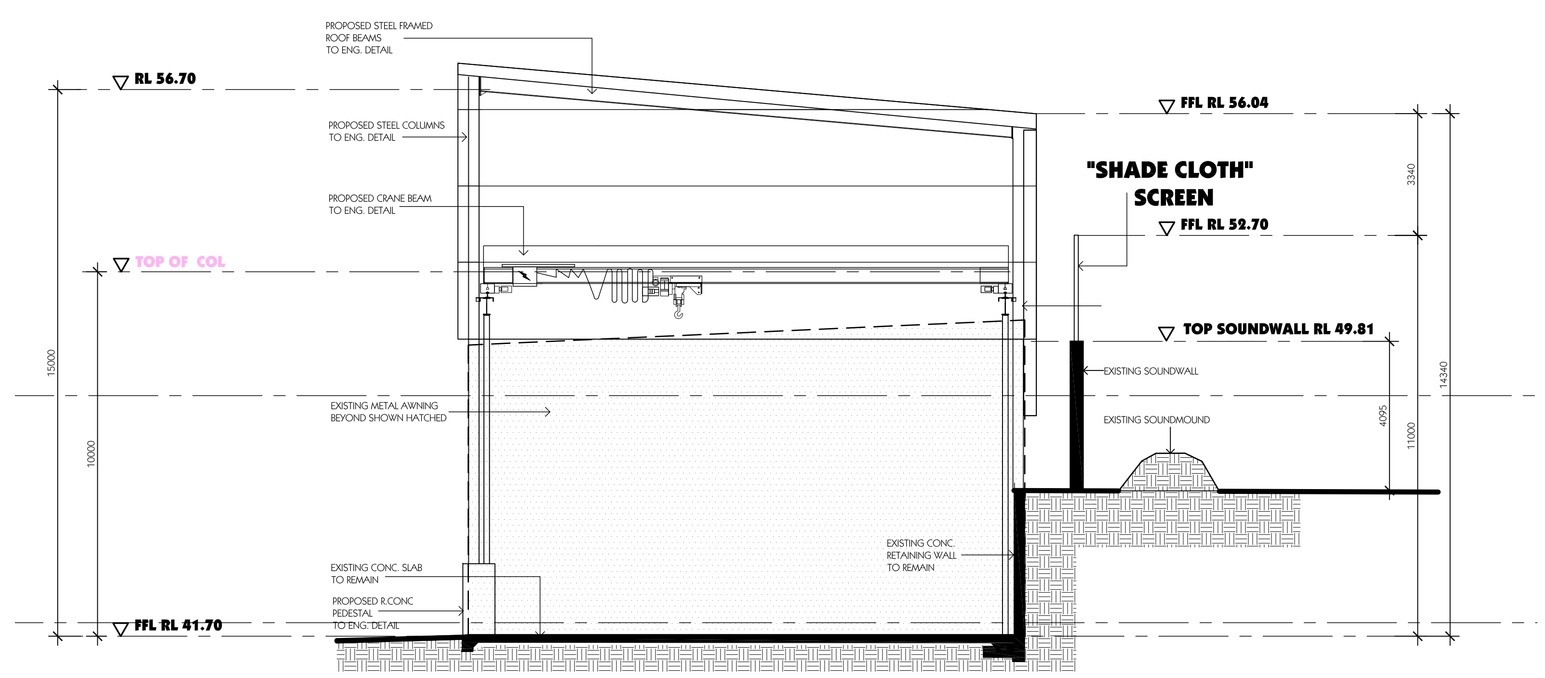

SECTION
THRU BUILDING "L"

Issue	By	Description	Date
A	CZ	FOR SECTION 96	00/11/17

GENERAL NOTES

1) All dimensions and floor areas are to be verified by the Builder prior to the commencement of any building work. Any discrepancies are to be brought to the attention of the designer.
2) Levels shown are approximate unless accompanied by reduced levels.
3) Figured dimensions must be taken in preference to scaling.
4) All boundary clearances must be verified by the surveyor prior to the commencement of any building works.
5) Where engineering drawings are required such must take preference to this drawing.
6) Stormwater to be discharged to Councils' requirements and AS 3500.3–1990.
7) All services to be located and verified by the Builder with relevant authorities before any building work commences.

COPYRIGHT:
This design and the associated documents is subject to copyright laws and may not be reproduced in any form without written consent from Algorry, Zappia & Associates Pty Ltd.

PRELIMINARY 03

HARDCOPY DATE : 14/12/17

Consultants

Date	NOVEMBER 2017
Scale	1:200 UNO
Drawn	J.LARIA
Checked	C.ZAPPIA
Certified	

ALGORRY ZAPPIA & ASSOCIATES PTY. LTD.
ABN 43 064 950 690
Consulting Civil & Structural Engineers & Building Designers
Suite 4, Level 1, 84 Bathurst Street., Liverpool, NSW 2170
P.O. Box 885, Liverpool Business Centre, NSW 1871
Tel: 9602 3133 / 9602 0303 Fax: 9601 6903
E-mail: admin@algorryzappia.com.au
Web: www.algorryzappia.com.au

Project: PORPOSED ALTERATIONS TO EXISTING RECYCLING CENTRE
LOT 2 DP550522 & LOT 5 DP7086 , No 23 & 45
TATTERSALL RD, KINGS PARK

Client: SELL & PARKER METAL — Project No.: P4144

Title: DEVELOPMENT APPLICATION ELEVATIONS & SECTIONS

Activity Type:	Job No.:	Sheet No.:	Issue
DA	2182-17	A302	

B1 SHEET